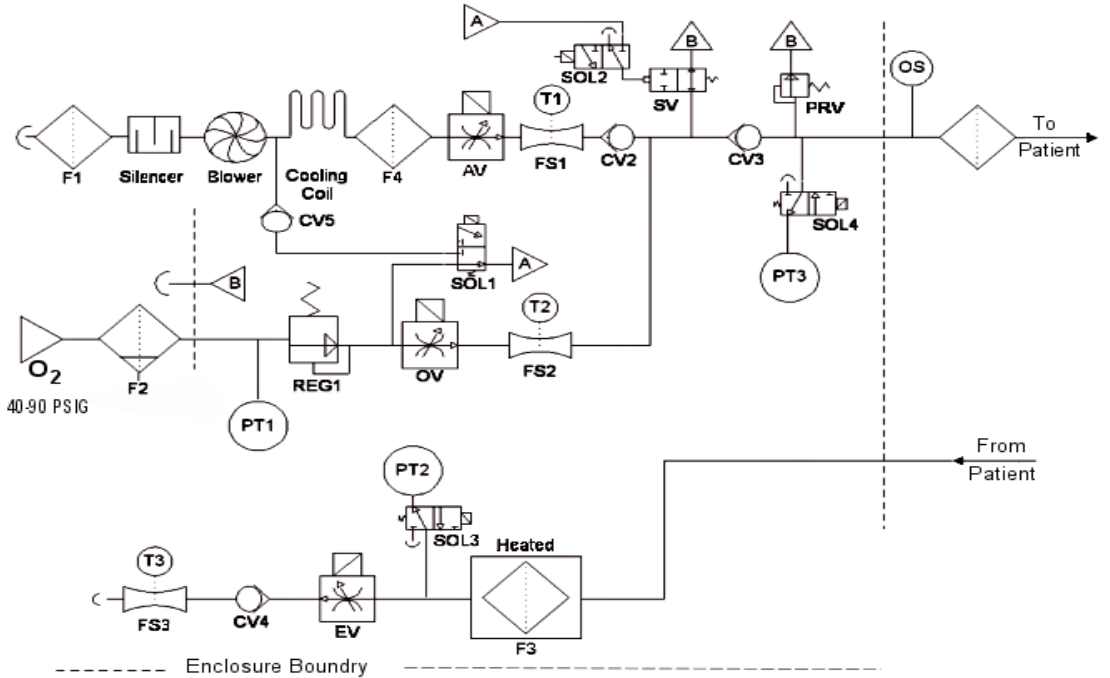
A
SOL2
B
SV
B
PRV
OS
T1
F1
Silencer
Blower
Cooling Coil
F4
AV
FS1
CV2
CV3
To Patient
CV5
SOL4
SOL1
A
PT3
B
T2
O2
F2
REG1
OV
FS2
40-90 PSIG
PT1
From Patient
PT2
SOL3
Heated
T3
FS3
CV4
EV
F3
Enclosure Boundry