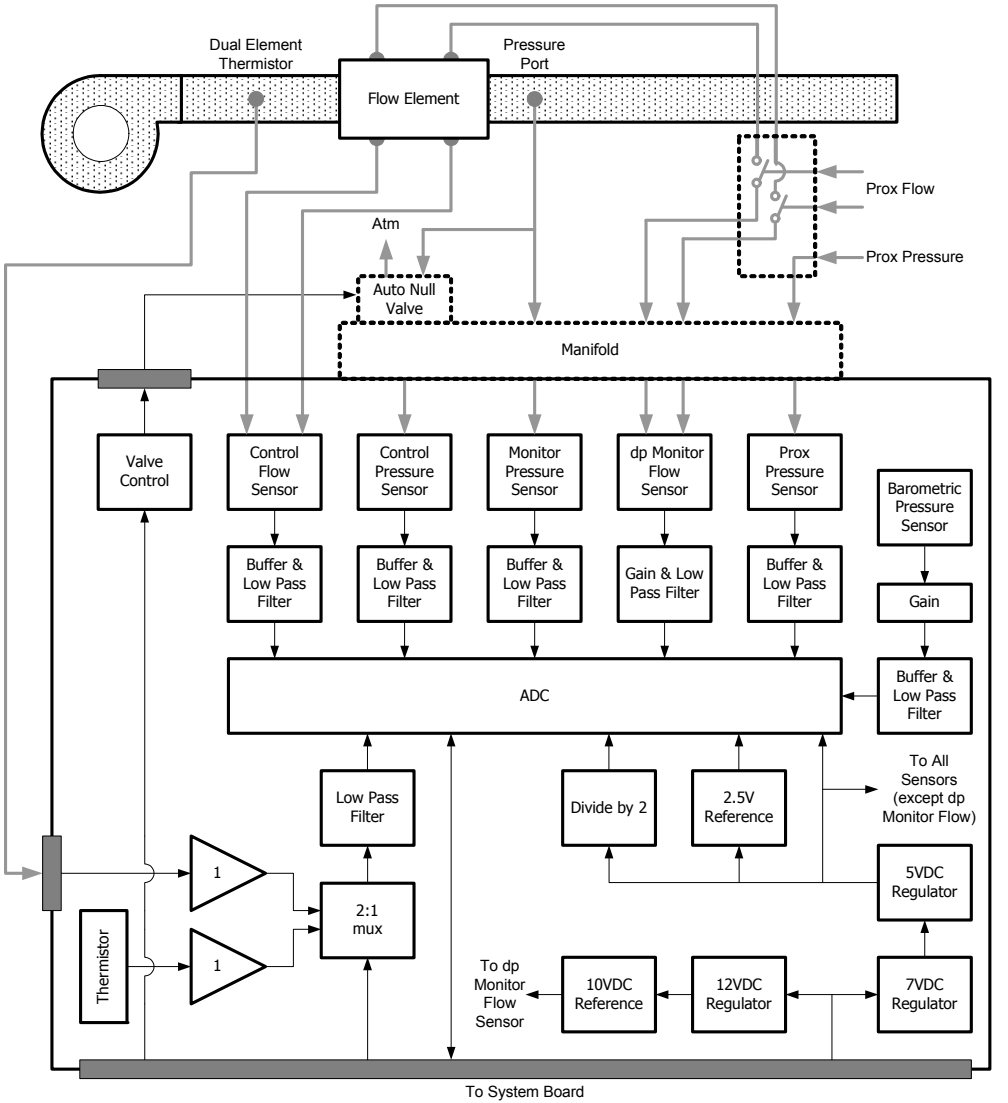
Dual Element Thermistor
Pressure Port
Flow Element
Prox Flow
Prox Pressure
Atm
Auto Null Valve
Manifold
Valve Control
Control Flow Sensor
Control Pressure Sensor
Monitor Pressure Sensor
dp Monitor Flow Sensor
Prox Pressure Sensor
Barometric Pressure Sensor
Buffer & Low Pass Filter
Buffer & Low Pass Filter
Buffer & Low Pass Filter
Gain & Low Pass Filter
Buffer & Low Pass Filter
Gain
ADC
Buffer & Low Pass Filter
To All Sensors (except dp Monitor Flow)
Low Pass Filter
Divide by 2
2.5V Reference
5VDC Regulator
1
1
2:1 mux
Thermistor
To dp Monitor Flow Sensor
10VDC Reference
12VDC Regulator
7VDC Regulator
To System Board