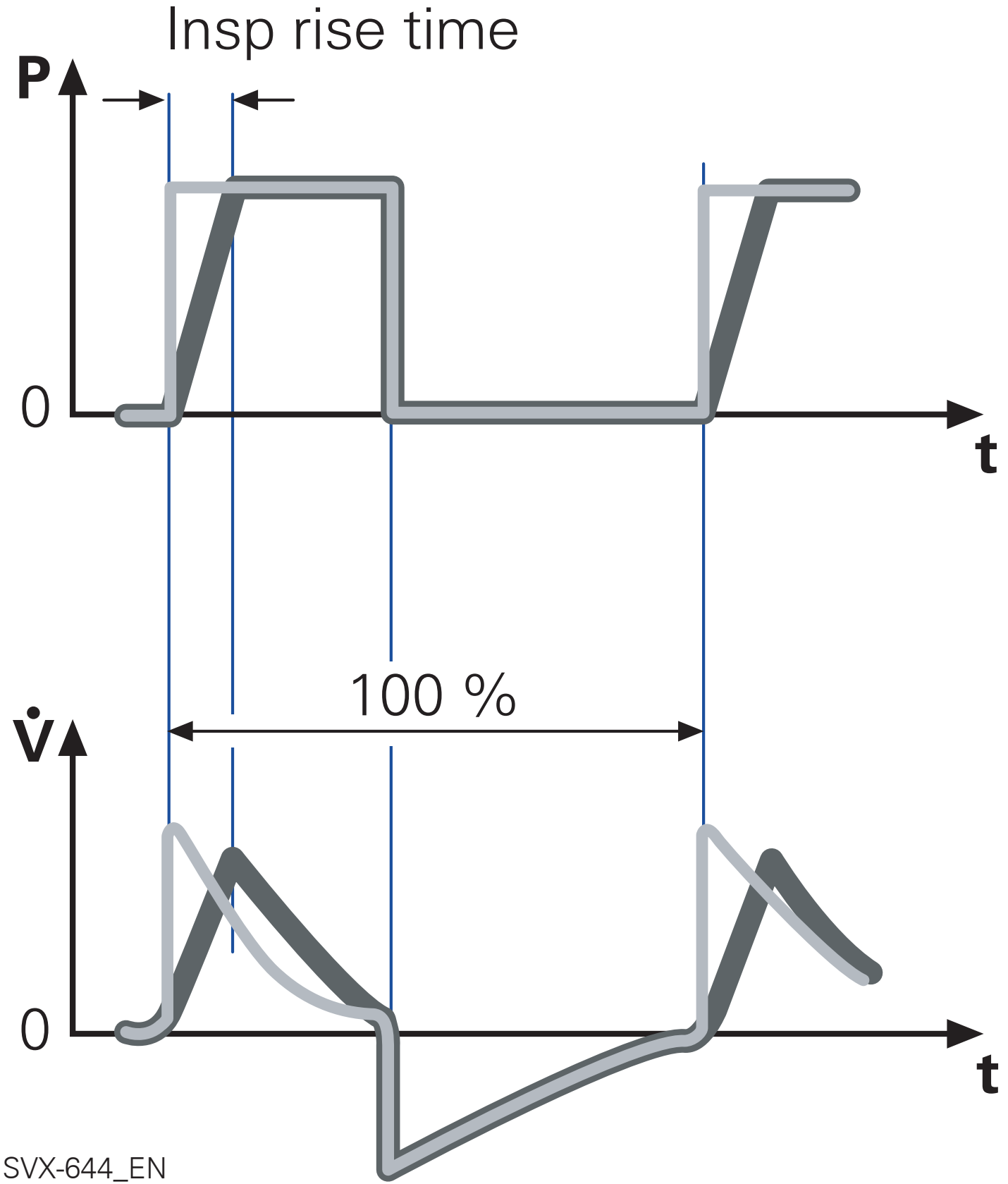
Insp rise time
P
0
t
100 %
V̇
0
t